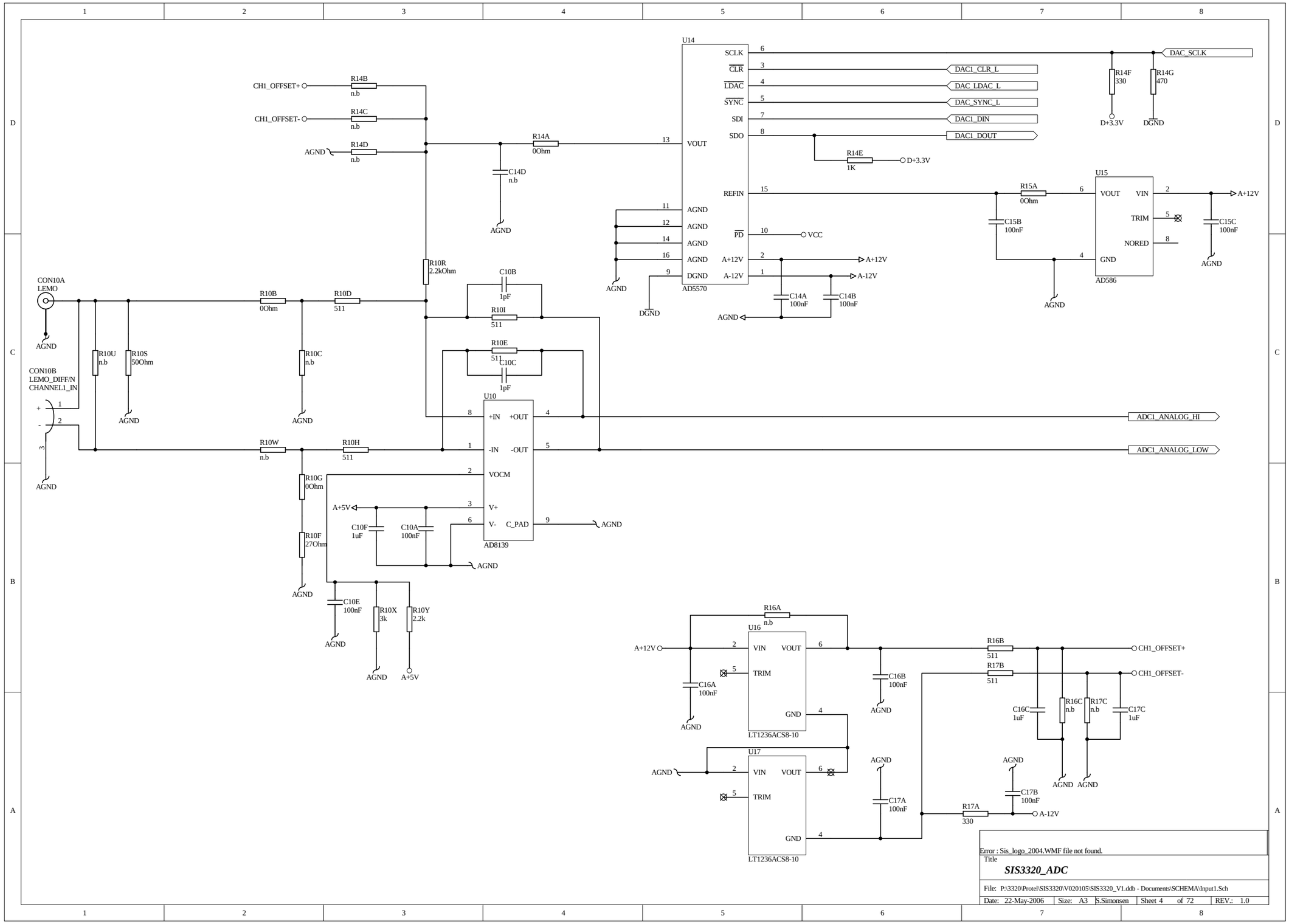

Error : Sis_logo_2004.WMF file not found.

Title

SIS3320_ADC

File: P:\3320\Protel\SIS3320\V020105\SIS3320_V1.ddb - Documents\SCHEMA\Input1.Sch

Date: 22-May-2006	Size: A3	S.Simonsen	Sheet 4 of 72	REV.: 1.0