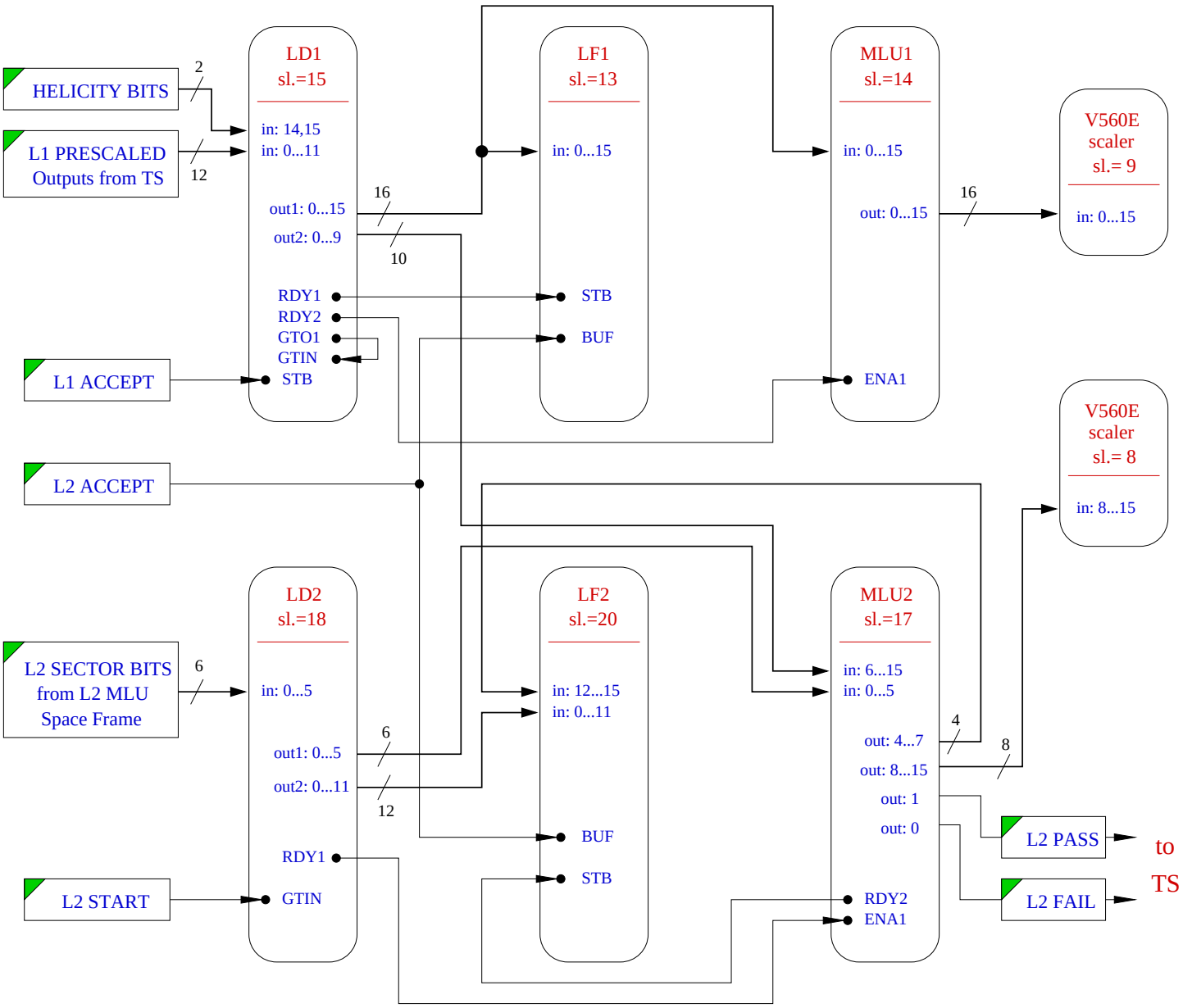Level 2 "Pass-Fail" Logic. FC, C2-6, VME="scaler1"